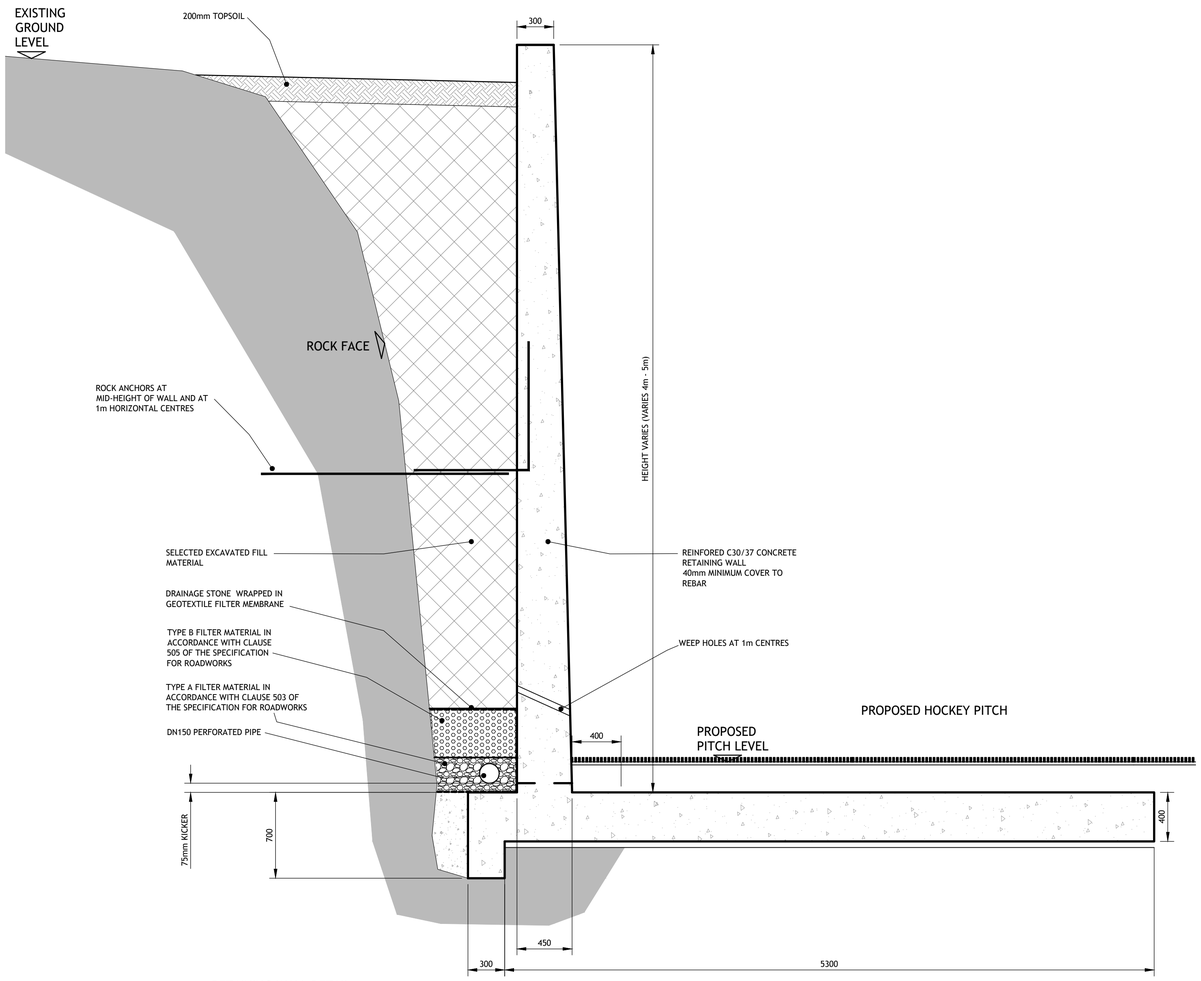

RETAINING WALL DETAIL
SCALE 1:25

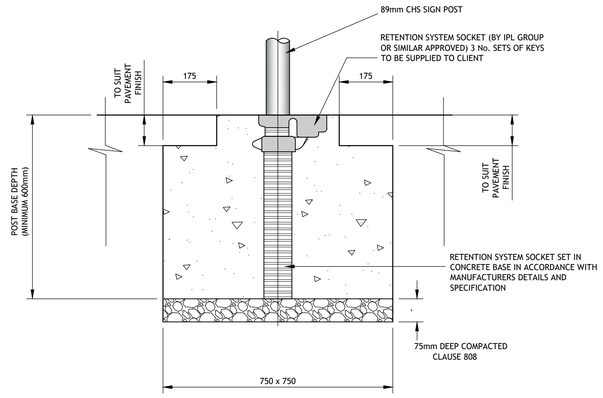

RETENTION SYSTEM SOCKETS FOR SIGN POST INSTALLATION
NOT TO SCALE

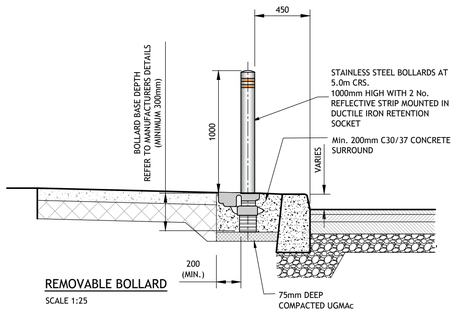

REMOVABLE BOLLARD
SCALE 1:25

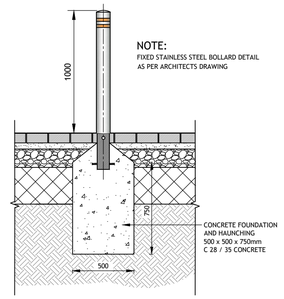

NOTE:
FIXED STAINLESS STEEL BOLLARD DETAIL AS PER ARCHITECTS DRAWING

FIXED STAINLESS STEEL BOLLARD FOUNDATION DETAIL
SCALE 1:20

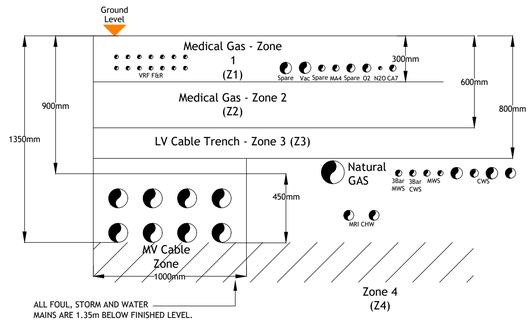

TYPICAL COMBINED SERVICES DETAIL
NOT TO SCALE

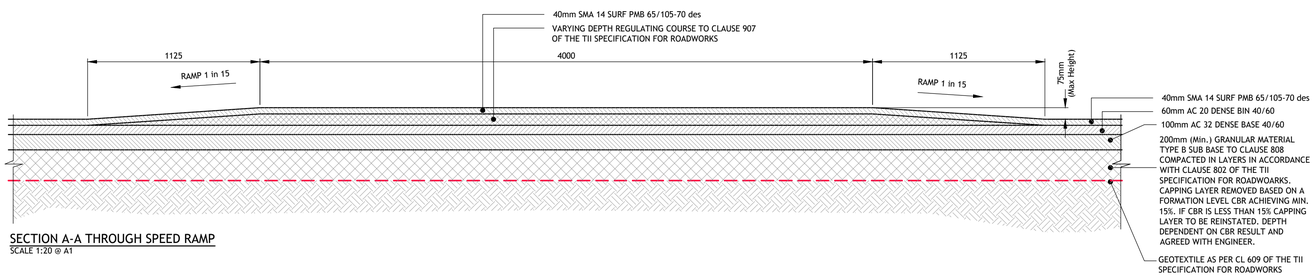

SECTION A-A THROUGH SPEED RAMP
SCALE 1:20 @ A1

© PUNCH Consulting Engineers
This drawing and any design hereon is the copyright of the Consultants and must not be reproduced without their written consent.
All drawings remain the property of the Consultants.
Figured dimension only to be taken from this drawing.
Consultants to be informed immediately of any discrepancies before work proceeds.
COLOUR DRAWING

BUILDING INFORMATION MODELLING (BIM)
I.S. EN ISO 19650-2:2018
NSAI Certified

Rev	Amendment	By	Date
C01	ISSUED FOR PLANNING	PJM	2025-10-17

Rev	Amendment	By	Date

Client:
GALWAY CITY COUNCIL

PUNCH consulting engineers
Dublin | Limerick | Cork | Galway | Glasgow
Carleycon House, Main Street, Oranmore, Co. Galway, H91 T026
t +353 91 703 500 | w punchconsulting.com

Project: KINGSTON PARK AND MILLERS LANE - PUBLIC PARK AND URBAN REALM PROJECT				
Title: ROAD DETAILS - SHEET 2				
Drawn: PJ Mulcahy	Date drawn: 2025-10-17	Technician Check: PJ Mulcahy	Engineer Check: Melusi Ncube	Approved: Matthew Greene
Project No: 233114	Model Ref: 233114-PUNCH-XX-XX-M2-C-0552		Drawing Status: A0 (Planning)	
Scale @ A1: As Shown	Document No: 233114-PUNCH-XX-XX-DR-C-0552			Revision No: C01